TOWN OF ATLANTIC BEACH

CORE LAND USE PLAN
EXECUTIVE SUMMARY

Adopted by the Atlantic Beach Town Council: April 21, 2008
Certified by the Coastal Resources Commission: _____

Prepared by:

Holland Consulting Planners, Inc.
Wilmington, North Carolina

The preparation of this document was financed in part through a grant provided by the North Carolina Coastal Management Program, through funds provided by the Coastal Zone Management Act of 1972, as amended, which is administered by the Office of Ocean and Coastal Resource Management, National Oceanic and Atmospheric Administration.

TOWN OF ATLANTIC BEACH
CORE CAMA LAND USE PLAN
EXECUTIVE SUMMARY

TABLE OF CONTENTS

PAGE

1. PREFACE 1

2. INTRODUCTION 2

3. TOWN OF ATLANTIC BEACH COMMUNITY VISION 2

4. KEY ISSUES/DOMINANT GROWTH-RELATED ISSUES 4

5. POPULATION SUMMARY 5

6. HOUSING SUMMARY 7

7. EMPLOYMENT AND ECONOMY SUMMARY 7

8. WATER QUALITY 8
   a. White Oak River Basin Watershed 9
   b. Subbasin 03-05-03 10
   c. Registered Animal Operations in the White Oak River Basin 10
   d. Population, Population Densities, and Growth Trends 11

9. ANALYSIS OF LAND USE AND DEVELOPMENT 11
   a. Introduction 11
   b. Land Use in Relation to Water Quality 12
   c. Existing Land Use 15

10. LAND USE/DEVELOPMENT GOALS AND IMPLEMENTING ACTIONS 16
   a. Introduction 16
   b. Impact of CAMA Land Use Plan Policies on Management Topics 17
   c. Public Access 17
   d. Land Use Compatibility 19
   e. Infrastructure Carrying Capacity 31
   f. Natural Hazard Areas 33
   g. Water Quality 36
   h. Local Areas of Concern 39

PAGE

TABLES

Table 1 Town of Atlantic Beach and Carteret County, NC Summary of Year-Round Population Growth, 1970-2000 5

Table 2 Town of Atlantic Beach, NC Permanent, Seasonal, and Total Peak Population Projections, 2000-2030 6

Table 3 Subbasin 03-05-03 Area, Population, and Land Cover 10

Table 4 Town of Atlantic Beach Existing Land Use, February 2005 15

EXECUTIVE SUMMARY

1. PREFACE

This plan is intended to fulfill the Coastal Area Management Act (CAMA) requirements for the preparation of a Core CAMA Land Use Plan. This plan is organized to adhere to the 15A NCAC 7B requirements. This is a Core Land Use Plan. The Core Plan is defined as follows:

> **Core Plan:** This plan addresses all of the plan elements in Rule .0702 of Section 7B (Elements of CAMA Core and Advanced Core Land Use Plans) in a complete and thorough manner. These are summarized as follows: (1) Organization of the Plan, (2) Community Concerns and Aspirations, (3) Analysis of Existing and Emerging Conditions with the jurisdiction, and (4) Plan for the Future. This type of plan is the standard CAMA Land Use Plan required for all 20 coastal counties.

In addition to the CAMA requirements, there are other reasons to plan. Atlantic Beach has a great deal of influence on the way in which the town develops. The buildings, facilities, and improvements provided by Atlantic Beach affect the daily lives of its citizens, give form to the town, and stimulate or retard the development of privately-owned land. In addition, the workings of the real estate market help determine the uses of private land, but these uses are regulated by Atlantic Beach. The town has an opportunity to coordinate the overall pattern of physical development.

Atlantic Beach is inescapably involved in questions of physical development. At almost every meeting of the Town Council, development decisions must be made concerning rezoning, street improvements, sites for public buildings, and so on. Atlantic Beach — and particularly the legislative body made up of lay citizens — needs some technical guidance in making these physical development decisions. Atlantic Beach needs an instrument that establishes long-range, general policies for the physical development of the community in a coordinated, unified manner, and which can be continually referred to in deciding upon the development issues that come up every week. The comprehensive plan is such an instrument.

Once this plan is adopted, the town must realize that the plan is not the end of the process. Atlantic Beach must continuously work at accomplishing plan implementation and establishing an effective planning program. **The town must view the preparation of this document as the first step in a continually evolving process.**

The policies and implementing actions section of this plan, pages 17 to 45 includes numerous recommendations for new regulatory ordinances and revisions to existing regulatory ordinances. These revisions are essential to the successful implementation of this document.

2. INTRODUCTION

This fiscal year 2004/2005 - 2005/2006 Core CAMA Land Use Plan is prepared in accordance with the requirements of the North Carolina Coastal Area Management Act (CAMA). Specifically, this document complies with Subchapter 7B, "CAMA Land Use Planning Requirements," of the North Carolina Administrative Code, as amended, August 1, 2002.

The 7B guidelines provide that each of the twenty coastal counties and municipalities within those counties prepare and adopt a Core CAMA Land Use Plan that meets the planning requirements adopted by the Coastal Resources Commission (CRC). If a county chooses not to prepare a plan, the guidelines specify that the CRC will prepare and adopt a CAMA Land Use Plan for that county and municipalities within the county which choose not to prepare their own plan. Municipalities not preparing their own plan will be included in the plan for the county in which the municipality is located.

At the beginning of the preparation of this document, the Town of Atlantic Beach adopted a Citizen Participation Plan which is intended to ensure that all interested citizens have an opportunity to participate in the development of this plan through both oral and written comments. The citizen input received during the development of this plan has greatly influenced the final contents of the plan and its policies.

The Town of Atlantic Beach guided the development of this plan. The Atlantic Beach Planning Board was composed of the following members:

Joe Tarascio, Chairman	Vada Palma
Larry Burke	Trace Cooper
Tom Outlaw	Dewey L. Bordeaux, III
Karen Koenig	Jim Bailey
Norman Livengood	Ellen Womer

Following adoption of the plan by the Atlantic Beach Board of Commissioners, it was submitted to the CRC for certification. Certification of the plan was achieved on _____, 2008.

3. TOWN OF ATLANTIC BEACH COMMUNITY VISION

Since its establishment, the Town of Atlantic Beach has always served as an open, public destination for all visitors and residents to come and enjoy the unique amenities offered by a community located on a natural barrier island. It is the vision of the Town to preserve its all-inclusive past while continuing to promote the community as a desirable location to visit, live, work, and play.

The Town desires to balance its year-round residential areas, second home areas with low rental use, and its vital tourist population. The need to buffer these uses is necessary as is allowing and encouraging appropriate commercial development to service these populations. The protection of our environmental assets is of the highest importance as the sound and ocean are what make all of us desire to be here. A high quality of life must be maintained and a small town atmosphere preserved.

Atlantic Beach's mission is to establish development and redevelopment patterns that preserve and promote its residential neighborhoods and commercial business areas while protecting the vital natural resources that make Atlantic Beach a truly unique destination. Atlantic Beach will achieve this through enhancement of Town services and infrastructure; protection of the Town's wetlands, maritime forests, and natural areas of the Atlantic Ocean and Bogue Sound; and through the encouragement of private investment that utilizes creativity to promote sustainable development that is beneficial to all visitors and residents of the Town.

The following issues are important to the Town's future:

- Protection of environmental assets.
- Preserving a small town atmosphere.
- Prudent economic development.
- Partnerships.
- Balance needs of permanent, visitor, and seasonal population.
- Encouraging mixed-use, including entertainment uses.
- Open access to the beach and sound areas.
- Encourage non-automobile transit improvements.
- Enhancement of town services and infrastructure.
- Sustainable development through encouragement of creative private investment.
- Vibrant and diverse community.

4. KEY ISSUES/DOMINANT GROWTH-RELATED ISSUES

This document will attempt to assess all issues and concerns that may affect the growth and natural environment in the Town of Atlantic Beach over the 5-year planning period. Due to resource and time limitations, however, primary, or "key" issues must be identified and prioritized. These key issues are those that the Town will spend additional resources in analyzing, assessing and developing goals, policies, objectives, and implementing tasks to address over the planning period.

In order to identify these issues, the Town held an Issues Identification Meeting on February 1, 2005. This meeting was widely advertised, through direct solicitation of citizens with known interests in civic affairs and representatives of organizations with interest in these affairs (including representatives of State agencies responsible for CAMA Plan oversight). Additionally, a notice was sent to a randomly selected 10% of all landowners in the Town (43 landowners of approximately 435) and was advertised in the Carteret County News-Times newspaper.

At the meeting, the Town's planning consultants, Holland Consulting Planners, Inc., provided an overview of the CAMA Land Use Planning process and then led the assembled group of approximately 15 persons in a "brainstorming" session to identify issues that the group adjudged to be significant to the Town of Atlantic Beach's growth and environment over the planning period. These issues were then listed on large writing pads and affixed to the wall of the Atlantic Beach Town Hall Boardroom where the meeting was held. At the end of the meeting, participants received 10 "votes" and identified their 10 top issues (1 vote per issue - no "multi-voting" with multiple votes per issue). The results are recorded below:

Key Issues identified at the February 1, 2005 Issues Identification Meeting

Town Meeting			
# of Votes	Rank	Issue	Absentee Ranking
8	**1**	**Beach Maintenance**	**1**
7	**2**	**Beach Renourishment Efforts (especially from Brandt Island)**	**4**
6	**3**	**Density of Future Development**	**2**
6	**4**	**Development of Sewer System**	**3**
6	**5**	**Tree Ordinance/Tree Protection**	**10**
5	**6**	**Commercial and Residential Redevelopment**	**7**
5	**7**	**Development Regulations**	**5**
5	**8**	**Recreational Opportunities (Active and Passive)**	**9**
5	**9**	**Stormwater Management in Town**	**8**
5	**10**	**Water Supply/Water System**	**6**

Town Meeting			
# of Votes	Rank	Issue	Absentee Ranking
3	11	Need for/Preservation of Native Plantings/Vegetation	
3	12	Public Boat Access	
3	13	Reduction of Commercial Areas in Some Parts of Town	
3	14	Reuse of Public Facilities and Town Buildings	
2	15	Public Beach and Sound Access	
2	16	Transportation Improvements	
1	17	Coastal Habitat Protection Plan (CHPP)	

NOTE: The top ten "Key" or "primary" issues are in bold.
Source: Holland Consulting Planners, Inc., and the Town of Atlantic Beach Planning Department.

The top ten issues identified were flagged for additional analysis and consideration in the remainder of this document.

Additionally, surveys were mailed out to 494 absentee property owners. A total of 211 completed questionnaires were received; and 10 survey responses were generated from the web-site posting of the survey. The table above provides a comparison of these results to the ranking from the Town meeting.

5. POPULATION SUMMARY

Historical population growth and forecast of population growth are summarized in the following tables.

Table 1: Town of Atlantic Beach and Carteret County, NC
Summary of Year-Round Population Growth, 1970-2000

	Year-Round Population				Percentage Change			
	1970	1980	1990	2000	'70-'80	'80-'90	'90-'00	Overall '70-'00
Atlantic Beach	300	941	1,938	1,781	213.7%	105.9%	-8.1%	493.7%
Carteret County	31,603	41,092	52,553	59,383	30.0%	27.9%	12.9%	87.9%

The NC Office of State Planning provides the following population estimates: Carteret County 2005 population estimate - 62,766; Atlantic Beach 2004 population estimate - 1,791.

Source: NC State Data Center; extrapolation of data for unincorporated areas by Holland Consulting Planners, Inc.

Table 2: Town of Atlantic Beach, NC
Permanent, Seasonal, and Total Peak Population Projections, 2000 - 2030

Year	Permanent Population Estimate	% Pop. Growth Previous 5 Years	Peak Seasonal Overnight Visitors	Peak Daytime Only Visitors	Total Peak Day Population
2000	1,770	N/A	12,448	9,000	23,218
2005	2,074	17.16%	12,913	9,369	24,355
2010	2,373	14.45%	13,240	9,753	25,367
2015	2,606	9.80%	13,143	10,153	25,902
2020	2,839	8.93%	13,015	10,570	26,423
2025	3,071	8.20%	12,887	11,003	26,962
2030	3,304	7.58%	12,759	11,454	27,517

Source: Holland Consulting Planners, Inc.

The following provides a summary of the significant demographic factors:

- From 1970 to 2000, Atlantic Beach experienced a population increase of 493.7%; however, total population decrease by 8.1% from 1990 to 2000.
- The Morehead City Township, which includes Atlantic Beach, is the fastest growing township in Carteret County.
- Most of the town's population growth has been the result of in-migration.
- 2000 peak seasonal population was 27,431, 15.1 times the permanent year-round population.
- Atlantic Beach's peak day population (day visitors and seasonal/ permanent residents) is estimated at 45,000 in 2004.
- During the 1990s, Atlantic Beach's median age increased rapidly from 31.3 to 48.7.
- Atlantic Beach's permanent population ranks ahead of the state's population in college degree achievement.
- Atlantic Beach has a very small minority population.

6. HOUSING SUMMARY

- There are 4,599 total dwelling units within Atlantic Beach. Of these, approximately 80% (3,664) are considered vacant and 20% (935) are occupied.

- There are 4,831 residential structures within Atlantic Beach as of 2004; 74% of these have been constructed since 1970. This total has been quantified using a combination of the 2000 US Census and building permit activity provided by the Town of Atlantic Beach.

- Residential structures within Atlantic Beach on average have 4.7 rooms per unit, and 44% have three or more bedrooms.

- Out of the 4,744 reported in the 2000 US Census, 30.8% are single-family homes and 27.9% are mobile homes.

- Approximately 90.7% of all owner occupant householders have moved into their homes on Atlantic Beach since the year 1990.

7. EMPLOYMENT AND ECONOMY SUMMARY

- The per capita income for Atlantic Beach residents is $31,339 and the mean income is $55,707.

- The median household income for citizens of Atlantic Beach was $38,312 according to the 2000 US Census, and 53.7% of the town's residents take in an annual income of $35,000 or more.

- The largest employer of Atlantic Beach residents is the retail trade industry, accounting for seventeen percent (17%) of the total jobs reported in the census for persons employed age sixteen and over.

- Government jobs pay the highest average weekly wage to permanent residents of Atlantic Beach. This data is based on information for Carteret County overall, due to the fact that this information is not available at the municipal level.

- Approximately fifty-three percent of all Atlantic Beach residents have commuting time of fifteen minutes or more to work.

- The largest number of non-residential building permits have been granted for commercial construction dating back to 1990.

- Tourism is the major industry within Atlantic Beach.
- Domestic tourism generated an economic impact of $224.26 million in 2003.
- Carteret County is ranked 12th in the state for travel impact.
- In Carteret County more than 3,310 jobs are directly attributable to travel and tourism.
- Commercial fishing still has a presence in Atlantic Beach; however, the number of individuals relying on this industry has decreased over the last five to ten years.

8. WATER QUALITY

Water quality in and near the Town of Atlantic Beach is considered at many points in this Plan. However, because of the significant relationship between land use and water quality, a section focusing specifically on local and regional water quality is included here, prior to detailed discussions of existing and future land use. This Plan will primarily analyze water quality on the watershed and subbasin level.

A watershed is the area of land where all of the water that is under it or drains off of it goes into the same place. Geographer John Wesley Powell put it best when he said that a watershed is:

"that area of land, a bounded hydrologic system, within which all living things are inextricably linked by their common water course and where, as humans settled, simple logic demanded that they become part of a community." (Source: U.S. Environmental Protection Agency).

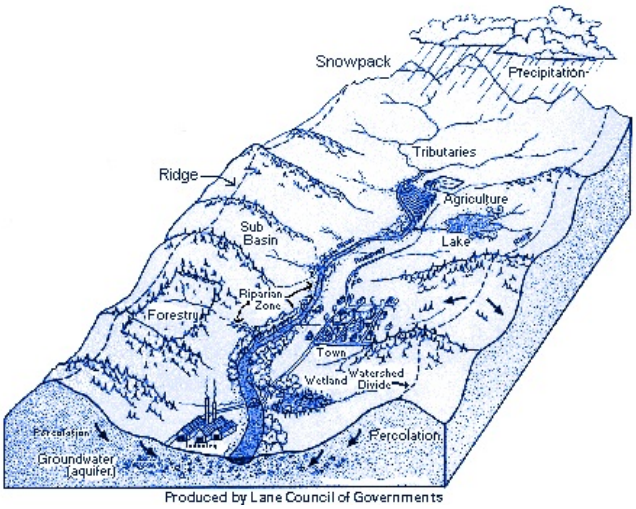

Pictorial Representation of a Watershed (Source: Lane County, Oregon, Council of Governments)

The Town of Atlantic Beach is located wholly in the White Oak River watershed and (significantly) at the outfall of the watershed.

Subbasins are geographic areas that represent part of a watershed, made up of a combination of drainage areas and/or distinct hydroponic features, all draining to the primary watershed. The Town of Atlantic Beach is located in the Newport River subbasin, also known by its USGS designation, subbasin number 03-05-03.

In North Carolina, water quality is assessed primarily at the watershed or river basin (i.e., "basinwide") level, due to the interconnectedness of watersheds described above. Basinwide water quality plans are prepared by the North Carolina Division of Water Quality (DWQ) for each of the seventeen major river basins in the State and updated at five-year intervals. The basinwide plan for the White Oak River Basin was developed by DWQ in February, 1997 and updated in September, 2001. This document will be referred to as "BWP" in this Plan.

The goals of the BWP are as follows:

- Identify water quality problems and restore full use to impaired waters;
- Identify and protect high value resource waters;
- Protect unimpaired waters while allowing for reasonable economic growth;
- Develop appropriate management strategies to protect and restore water quality;
- Assure equitable distribution of waste assimilative capacity for dischargers; and
- Improve public awareness and involvement in the management of the state's surface waters.

The North Carolina Wetlands Restoration Program (NCWRP), in conjunction with the BWP, developed a Basinwide Wetlands and Riparian Restoration Plan (BWRRP) in 1998 to identify the need and opportunity for stream, riparian and buffer restoration in the White Oak Basin where water quality has been or likely could be degraded. This document will be referenced as the NCWRP.

a. White Oak River Basin Watershed

The White Oak River Basin is a 1,264-square mile watershed area that drains four separate river systems and their tributaries: the New River, the White Oak River, the Newport River, and the North River. It also drains the entirety of Core, Back, and Bogue Sounds, the latter being the location of Atlantic Beach (Source: NCWRP, page 3).

DWQ has developed a draft third edition of its 5-year basin plan for the White Oak River Basin. The draft was available in January 2007. Some of the information provided here has been obtained from DWQ's draft 2006 basin plan.

The basin contains much of Onslow and Carteret Counties and small portions of Craven and Jones Counties, and includes a total of 16 municipalities, including the larger and fast-growing City of Jacksonville, as well as the Towns of Beaufort, Morehead City, Emerald Isle, and Newport.

It also contains five subbasins, 417 miles of streams, over 130,000 acres of estuarine waters and 91 miles of Atlantic Coastline.

b. Subbasin 03-05-03

Subbasin 03-05-03 is comprised of central Carteret County from the Croatan National Forest to Beaufort and Beaufort Inlet and contains the Town of Atlantic Beach, all of Bogue Banks, and Cape Carteret, Newport, and Morehead City. Table 3 provides an overview of the population and land use present in the subbasin.

Table 3: Subbasin 03-05-03
Area, Population, and Land Cover

Land and Water Area (square miles)		Land Cover (%)	
Total area:	228	Forest/Wetland:	59
Land area:	168	Surface Water:	26
Water area:	60	Urban:	4
		Cultivated Crops:	6.5
Population Statistics		Pasture:	4
2000 Est. Population:	14,846 persons		
Pop. Density:	65 persons per sq. mi.		

Monitored Water Body Statistics

Aquatic Life:	**Recreation:**
Total: 15.1 mi./5,788.1 ac.	Total: 11.2 mi./17,912.9 ac.
Total Supported: 5,847.9 mi.	Total Supported: 11.2 mi./17,764.7 ac
Total Impaired: 140.2 ac.	Total Impaired: 148.1 ac.
Total Not Rated: 15.1 mi.	

Shellfish Harvesting:
Total: 5.2 mi./23,867.4 ac.
Total Supported: 19,357.1 ac.
Total Impaired: 5.2 mi./14,410.3 ac.

As Table 3 indicates, the subbasin is heavily forested and only contains one developed area north of Morehead City - the Town of Newport. Although there are indications of nutrient inputs in the upper Newport River, as well as elevated levels of fecal coliform bacteria, the water quality in the subbasin is generally good, with 11,236 of 34,146 acres of estuarine waters being classified by DWQ as Outstanding Resource Waters (ORW).

There are eight (8) facilities permitted to discharge wastewater into the subbasin under the National Pollutant Discharge Elimination System (NPDES) with a total permitted flow of approximately 4.75 million gallons per day (MGD).

c. Registered Animal Operations in the White Oak River Basin

The presence of animal operations is significant to water quality, since these operations typically produce large amounts of waste that can negatively affect water quality. This is particularly true in subbasin 03-05-03 where fecal coliform contamination has been a significant concern, due to the impact on shellfishing and recreation described above.

According to the draft BWP, there are two swine operations with a total of 951 animals within Subbasin 03-05-03. These operations are located near Newport on the mainland of Carteret County. While the number of operations remained constant between 1998 and 2004, the number of animals decreased significantly from 3,375 animals in 1998 to the 951 cited above.

d. Population, Population Densities, and Growth Trends

According to the 2006 draft BWP, the 2000 population of the basin was estimated to be 311,680, or approximately 3.9% of the State's 2000 population. The majority of this population resides in Onslow County. The current density of the basin is 131 persons per square mile.

For subbasin 03-05-03, the total estimated 2000 population was 14,846, an increase of approximately 30.2% over the estimated 1990 population of 11,404. This number reflects only the permanent population and does not reflect the huge seasonal populations in Morehead City and the towns along Bogue Banks, including Atlantic Beach.

This population increase is reflected in the increase in urban land cover in the White Oak River Basin watershed from approximately 52 acres in 1982 (4% of land area) to 95 acres in 1997 (8% of land area) - an 81% increase. The vast majority of this increase comes from the mainland, since Atlantic Beach is very nearly built out to its maximum urbanized land cover, although densities could increase in the future. During this same period, forested lands shrunk by 9.7% from 379 acres to 342 acres.

9. ANALYSIS OF LAND USE AND DEVELOPMENT

a. Introduction

The Division of Coastal Management Land Use Plan Guidelines (15A NCAC 7B.0207) require that existing land uses and water uses be mapped. The land and water use maps in conjunction with the land suitability map should be utilized as working documents and serve as a basis for the development of the future land use map(s). Specifically, this plan should address the following:

- Significant land use compatibility problems;
- Significant water use compatibility problems including those identified in any water supply plan appendix and those identified in the applicable Division of Environmental Management basinwide plan;

- Significant problems that have resulted from unplanned development and that have implications for future land use, water use, or water quality;

- An identification of areas experiencing or likely to experience changes in predominant land uses;

- Significant water quality conditions and the connection between land use and water quality.

b. Land Use in Relation to Water Quality

This section will serve to take a closer look at how land use in the Town of Atlantic Beach relates to water quality. This section has been compiled with information provided by the 2006 draft BWP.

It should be noted that the results of the monitoring efforts are not intended to provide precise conclusions about pollutant budgets for specific watersheds. Since the assessment methodology is geared toward general conclusions, it is important not to manipulate the data to support policy decisions beyond the accuracy of the data.

Two primary methods of water quality testing were performed in the Town of Atlantic Beach. The details of this methodology are described below so that the information on the results of this testing can be better understood. The methods utilized were Benthic Macroinvertebrate Monitoring (BMM) and the Ambient Monitoring System (AMS). DWQ also observes water bodies for the existence of algal blooms, which are an indication of poor water quality.

Benthic macroinvertebrates are organisms, primarily aquatic insect larvae, which live in and on the bottoms of rivers and streams. The use of macroinvertebrate data has proven to be a reliable water quality monitoring tool because most macroinvertebrates are immobile and sensitive to subtle changes in water quality. Benthic communities also respond to, and show the effects of, a wide array of potential pollutant mixtures.

The Ambient Monitoring System (AMS) is a network of stream, lake, and estuarine (saltwater) water quality monitoring stations (about 420 statewide) strategically located for the collection of physical and chemical water quality data (or parameters). Water quality parameters are arranged by freshwater or saltwater water body classification and corresponding water quality standards.

Prolific growths of phytoplankton, often due to high concentrations of nutrients, sometimes result in “blooms” in which one or more species of alga may discolor the water or form visible mats on the water's surface. Blooms may be unsightly and deleterious to water quality causing fish kills, anoxia, and taste and odor problems.

The results of monitoring at the AMS and BMM stations, together with the water quality monitoring efforts at and near shellfish grounds by the North Carolina Division of Environmental Health/Shellfish Sanitation office (DEH SS) indicate that relatively dense land use with little buffering of the Sound, poorly controlled stormwater discharges, and the presence of many poorly functioning septic systems is having a negative effect on water quality.

The waters of Bogue Sound north of Atlantic Beach are classified as “SA” or suitable for commercial shellfish harvesting - a categorization limited to only the highest quality estuarine waters in the State. Unfortunately, there are four areas in Atlantic Beach that are closed to shellfish harvesting due to fecal coliform bacteria contamination, a component of human and animal fecal waste matter.

All waters are impaired on an evaluated basis in the fish consumption category because of elevated mercury levels. No freshwater was Impaired in this subbasin, except for fish consumption.

The 2001 BWP made the following recommendations regarding water quality in subbasin 03-05-03 that are applicable to the Town of Atlantic Beach:

- Bogue Sound Reclassifications: The bacteriological water quality of Bogue Sound north of the Town continues to decline. Therefore, DWQ has indicated that they may recommend an expansion of the areas of Bogue Sound closed to shellfishing, depending on the frequency of temporary closures caused by spikes in recorded fecal coliform counts.

- Stormwater Pumping: DWQ and the Division of Environmental Health / Shellfish Sanitation office (DEH SS) are “monitoring” the Town’s discharge of pumped stormwater onto beaches and estuarine areas and this discharge’s impact on shellfish harvesting waters. This stormwater pumping can negatively impact shellfish harvesting and fish spawning areas. The discharge of pumped stormwater onto beaches and recreational waters results in a public advisory being released and a sign posted at the discharge site that discourages swimming.

The BWP also makes the following recommendations regarding land use planning to improve water quality in the White Oak River basin:

- Minimize number and width of residential streets
- Minimize size of parking areas
- Place sidewalks on only one side of residential streets
- Minimize culvert pipe and hardened stormwater conveyances
- Vegetate road right-of-ways to increase infiltration
- Plant and protect natural buffer zones along streams and tributaries

Other recommended items include:

- Controlling stormwater runoff
- Protecting wetland areas through land use plans

The 2006 draft BWP provided the following local initiatives for the subbasin:

- Land acquisition projects in this subbasin through North Carolina Coastal Federation (NCCF) total 118 acres and include Hoop Pole Creek in Atlantic Beach, Emerald Isle Woods in Emerald Isle, and Sugarloaf Island in Morehead City. NCCF is investigating the possibility of the acquisition of conservation easements on about 7,000 acres of land north of the Newport River to protect water quality in the Newport and preserve forested habitat. This is a high priority in the oyster plan.

- NCCF has partnered on four stormwater projects in this basin, located at Emerald Isle Woods (2001), Morehead City Visitor's Center (2004), Carteret Community College (2006), and Hoop Pole Creek (2007).

- Living Shoreline Projects provide shoreline stabilization while also restoring wetland habitat area and providing a stormwater buffer. Living shorelines projects in this subbasin are located at the NC Maritime Museum in Beaufort (2001), Duke University Marine Lab in Beaufort (2002), NC Aquarium at Pine Knoll Shores (2002), and four private locations in Morehead City, Beaufort, Pine Knoll Shores, and Salter Path.

- Oyster habitat area has been restored through NCCF at Hoop Pole Creek in Atlantic Beach. Four distinct oyster reef areas have been restored through different projects from 1998-2006. These projects also included educational opportunities for local students and research opportunities for local universities.

- A shoreline stabilization and habitat restoration project was completed at Carteret Community College in 2006. This project included sections of living shoreline, offshore breakwaters, oyster reef habitat, and a stormwater bmp.

- This subbasin is targeted for conservation by Onslow Bight Conservation Forum.

It should be noted that the NC Division of Water Quality determined that its current coastal stormwater rules have not been adequately effective towards addressing water quality impacts to public trust waters. Additionally, DWQ's review of scientific studies has resulted in a determination that local governments simply deferring to state and federal rules to address water quality issues still results in impaired local water quality based on the following conclusions:

- Areas with impervious surfaces of 10% or greater can be linked to local stream degradation.

- Biological diversity has been shown to drop when impervious surface areas increase beyond 10-15%.

- Stream stability is affected when impervious surfaces approach 10% in an area.

- Estuaries generally degrade with impervious surfaces of greater than 10%.

- Sensitive fish species loss increase after about 12% impervious surface.

c. Land Use Summary

The following table provides approximate land use acreage summaries for the Town of Atlantic Beach corporate limits. Atlantic Beach includes a total of 1,650.58 acres.

Table 4: Town of Atlantic Beach
Existing Land Use, February, 2005

Land Use Category	Parcels	Acres	% of Total Acres
Commercial	176	129.315	7.83%
Mobile Home	124	21.760	1.32%
Mobile Home Park	118	88.835	5.38%
Multi-Family	1,974	180.188	10.92%

Table 4 (continued)

Land Use Category	Parcels	Acres	% of Total Acres
Office and Institutional	8	7.128	0.43%
Recreation	5	1.315	0.08%
Single-Family Residential	1,589	351.800	21.31%
Utilities	10	79.286	4.81%
Vacant	426	466.321	28.25%
Right-of-way	N/A	178.322	10.81%
Water	N/A	146.310	8.86%
TOTAL	4,430	1,650.580	100.00%

Source: Holland Consulting Planners, Inc., and the Town of Atlantic Beach Planning Department.

10. LAND USE/DEVELOPMENT GOALS AND IMPLEMENTING ACTIONS

a. Introduction

The purposes of the Coastal Resources Commission (CRC) management topics are to ensure that CAMA Land Use Plans support the goals of CAMA, to define the CRC's expectations for the land use planning process, and to give the CRC a substantive basis for review and certification of CAMA Land Use Plans. Each of the following management topics (Public Access, Land Use Compatibility, Infrastructure Carrying Capacity, Natural Hazard Areas, Water Quality, and Local Areas of Concern) include three components: a management goal, a statement of the CRC's planning objective, and requirements for the CAMA Land Use Plan. These policies apply to all of Atlantic Beach's planning jurisdiction. The local concerns which should be addressed in this plan are identified on pages 4 and 5. These concerns and issues were utilized to develop the goals and objectives which are included in this plan. Most of the policies and implementing actions are continuing activities. In most situations, specific timelines are not applicable. The policies and implementing actions frequently utilize the following words: should, continue, encourage, enhance, identify, implement, maintain, prevent, promote, protect, provide, strengthen, support, work. The intent of these words is defined in Appendix IV of the CAMA Core Land Use Plan. Please note: Policies and Implementing Actions are numbered consecutively throughout this document with the letter "P" denoting a policy and the letter "I" denoting an implementing action.

b. Impact of CAMA Land Use Plan Policies on Management Topics

The development of this land use plan has relied heavily on the CAMA-prescribed existing suitability analysis which is included in Section 5.F of the CAMA Core Land Use Plan. It is intended that this document is supportive of the CAMA regulations for protection of AEC's (15A NCAC 7H). This plan is intended to support the Atlantic Beach vision statement which was developed based on the key issues identified on pages 4 and 5 of this document and the CAMA AEC regulations. No negative impacts are anticipated by the implementation of the goals, objectives, and policies which are included in this plan.

Note: Unless specifically excepted, it is intended that all policies are consistent with (do not exceed) applicable state and federal requirements when state and federal requirements apply.

c. Public Access

Management Goal: Atlantic Beach will protect, maintain and improve its existing shoreline access facilities for both ocean access and sound facilities.

Planning Objective: Atlantic Beach will endeavor to maintain adequate shoreline access for both year-round residents and seasonal users.

Land Use Plan Requirements: Atlantic Beach's policies/implementing actions will focus on providing adequate public access. The following summarizes the town's policies/implementing actions for public access.

Policies:

P.1 - The Town of Atlantic Beach supports the redevelopment of the "Circle" area as an action supportive of the town's provision of shoreline access.

P.2 - Atlantic Beach supports the frequency of shoreline access sites as defined by 15A NCAC 7M, Section .0300, Shorefront Access Policies. The Town also supports the preservation and maintenance of areas that have traditionally been used for public use (pedestrian and motorized boat access) and working waterfront areas.

P.3 - Atlantic Beach supports providing shoreline access for persons with disabilities.

P.4 - Atlantic Beach supports state/federal funding for piers for crabbing and fishing.

P.5 - Atlantic Beach supports the utilization of local, state, and federal funds for the acquisition of additional shoreline access sites.

P.6 - Atlantic Beach supports the donation of land for additional and expanded shoreline access sites.

Implementing Actions:

I.1 - The Town of Atlantic Beach will update its 1999 Public Access - Preliminary Recreation Assessment and request Division of Coastal Management funding for the preparation of the plan. *Schedule: Fiscal Year 2008-2009.*

I.2 - Atlantic Beach will pursue private sources of funding for the development of shoreline access facilities, including the donation of land. *Schedule: Continuing Activity.*

I.3 - Atlantic Beach may pursue funding under the North Carolina CAMA Shoreline Access funding program (15A NCAC 7M, Section .0300, Shorefront Access Policies). *Schedule: Continuing Activity.*

I.4 - Atlantic Beach will pursue funding from the North Carolina Wildlife Commission for the provisions of soundside boat ramps. Emphasis should be placed on the west end of town. *Schedule: Continuing Activity.*

I.5 - The town's public access sites should be clearly marked. *Schedule: Continuing Activity.*

I.6 - Atlantic Beach will make all improved shoreline access facilities handicapped accessible. *Schedule: Continuing Activity.*

I.7 - The town will prepare a map for public distribution which clearly indicates the location of all shoreline access sites and associated public parking. Copies of the map will be placed in local businesses for distribution. *Schedule: Fiscal Year 2008-2009.*

I.8 - Atlantic Beach will pursue options for the increase of off-street parking for shoreline access sites. *Schedule: Continuing Activity.*

I.9 - Atlantic Beach will continue to monitor the number of access sites with the demand and consider expansion when feasible. *Schedule: Continuing Activity.*

d. Land Use Compatibility

Management Goal: Atlantic Beach will support land uses which are mutually compatible and which minimize adverse environmental impacts; avoid risks to public safety/welfare; and consider the limitations of land suitability.

Planning Objectives: Atlantic Beach's planning program/efforts will provide guidance to the local decision process while balancing development with a concern for protection of the town's natural resources.

Land Use Plan Requirements: Atlantic Beach's land use compatibility policies and implementing actions support the development, preservation of land uses as depicted on the future land use map. These actions reflect a desire for balanced residential and non-residential preservation and growth.

Policies - Residential:

P.7 - Atlantic Beach supports the preservation of the "cottage" areas which are depicted on the Future Land Use Map.

P.8 - Atlantic Beach supports residential development within commercial mixed-use areas as depicted on the future land use map.

P.9 - Atlantic Beach supports residential development which meets the 15A NCAC 7H minimum use standards.

P.10 - Atlantic Beach supports revisions to the North Carolina state statutes which would allow the local imposition of impact fees or special legislation to allow them within the town's planning jurisdiction. Note: Impact fees would be levied against land developers to establish a revenue source to support the additional demand for services generated by the people occupying the proposed developments such as roads, water and sewer infrastructure, and recreational facilities.

P.11 - Atlantic Beach will continuously monitor the impact which the construction of a central sewer system will have on the town.

P.12 - Atlantic Beach will restrict dense/intense development in areas where the town wishes to encourage/preserve lower density development.

Implementing Actions - Residential:

I.10 - Atlantic Beach will review its zoning and subdivision ordinances to ensure consistency with the recommendations included in this plan. **The town's zoning ordinance must be revised to attain the densities which are delineated on the Future Land Use Map.** *Schedule: Fiscal Year 2007-2008.*

I.11 - Atlantic Beach will support residential development at the following residential densities which are reflected on the future land use:

(1) Low-density residential/1-6 units per acre.
(2) Medium-density residential/7-10 units per acre.
(3) High-density residential/over 10 units per acre.
(4) Mixed use residential/over 10 units per acre.
(5) Mixed use commercial/7-10 units per acre.
(6) Conservation/green space - No development except buildings accessory to recreational use in the RS district. *Schedule: Continuing Activity.*

I.12 - In the "cottage" districts, the Town of Atlantic Beach will maintain buildings at the existing size, height, and density through enforcement of its zoning ordinance. *Schedule: Continuing Activity.*

I.13 - Atlantic Beach will permit residential development to occur in response to market needs provided that the following criteria are met:

(1) Due respect is offered to all aspects of the environment.
(2) If deficient community facilities and services are identified, the town will attempt to improve such to the point of adequately meeting demands.
(3) Additional residential development will concurrently involve planning for improvements to community facilities and services if excess capacity does not exist within those facilities and services.
(4) Residential development is consistent with other Atlantic beach policies and the land use map as contained in this plan update.

This implementing action will be enforced through the Atlantic Beach zoning and subdivision ordinances. *Schedule: Continuing Activity.*

I.14 - All re-zoning and subdivision approvals will consider the existing and future land use suitability maps and analyses which are included in this plan. *Schedule: Continuing Activity.*

I.15 - Atlantic Beach will review its zoning and subdivision ordinances and consider establishing floor area ratio requirements to ensure that development is consistent with the density requirements of this plan. *Schedule: Fiscal Year 2007-2008.*

The following defines floor area ratio: Floor area ratio is determined by dividing the gross floor area of all buildings on a lot by the area of that lot.

Comment. The floor area ratio (FAR) was developed as a more refined and adaptable measure of intensity than building coverage. It expresses in one measure, instead of several, the mathematical relation between volume of building and unit of land. However, FAR cannot replace more traditional bulk controls entirely. Often, it is not a sufficient height control nor does it regulate the placement of the building on the site.

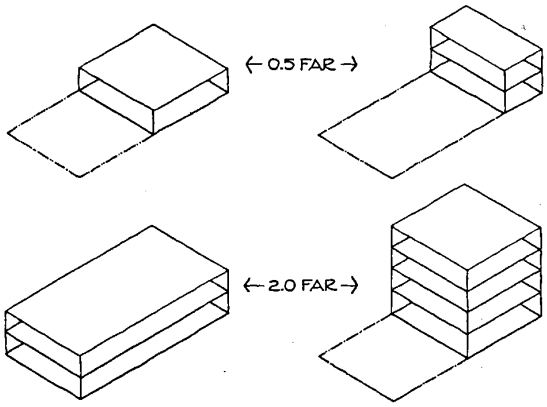

FLOOR AREA RATIO

I.16 - It is town policy to promote, foster, and encourage the redevelopment of old, poorly designed and underutilized areas. Redevelopment is preferred and deemed more important than development of currently undeveloped areas. Many developed areas are in poor condition with poor road design, lack of vegetation, dilapidated housing, mixed uses, etc. The town will continue a program of strict enforcement of the minimum code as a means to improve the quality of existing development. *Schedule: Continuing Activity.*

I.17 - Atlantic Beach will take an active supervisory role in all future redevelopment projects. All projects are required to consider the town's environmental policies and to address the town's other public needs, especially its needs for a sound street system. *Schedule: Continuing Activity.*

I.18 - Atlantic Beach will allow the reconstruction of any structures demolished by natural disaster or by other causes in accordance with all applicable federal, state and local regulations. *Schedule: Continuing Activity.*

I.19 - Atlantic Beach supports adoption by the U. S. Department of Housing and Urban Development of stricter standards for the construction of mobile homes which are to be located in the coastal zone. Such standards should increase wind resistant capabilities to a level consistent with that which is required for conventional site built housing. *Schedule: Continuing Activity.*

I.20 - The Town supports rezonings that are appropriate for the area. Requests for zoning changes will not be approved if the requested change will result in spot zoning. Spot zoning is a form of discriminatory zoning whose sole purpose is to serve the private interests of one of more landowners instead of furthering the welfare of the entire community as part of an overall zoning plan. Spot zoning is based on the arbitrary and inappropriate nature of a re-zoning change rather than, as is commonly believed, on the size of the area being re-zoned. *Schedule: Continuing Activity.*

Policies - Commercial/Industrial:

P.13 - The Town of Atlantic Beach opposes any industrial development/land use within its planning jurisdiction.

P.14 - The Town of Atlantic Beach supports commercial/mixed-use redevelopment of "The Circle" area.

P.15 - The Town of Atlantic Beach supports the concept of commercial/residential mixed use in all mixed use commercial areas as shown on the future land use map.

P.16 - The Town of Atlantic Beach opposes the construction of any privately-owned signs (including commercial signs) in areas of environmental concern as defined by 15A NCAC 7H. (It should be noted that this policy exceeds 7H development standards.)

P.17 - The Town of Atlantic Beach will support commercial development within AECs which meets the 15A NCAC 7H minimum use standards, Atlantic Beach zoning and subdivision requirements, and all policies contained within this plan.

P.18 - The Town of Atlantic Beach desires that new commercial development blend with surrounding neighborhoods. The concept of uniformity should be supported in all zoning deliberations. Uniformity is a basic premise of zoning which holds that all land in similar circumstances should be zoned alike; any different circumstances should be carefully balanced with a demonstrated need for such different treatment. Properly designed mixed use development is not considered to be at variance with the concept of uniformity.

P.19 - The Town of Atlantic Beach has concerns with potential offshore drilling and will oppose drilling operations and onshore support facilities for such operations. The Town recognizes that this policy is not enforceable outside of State and local waters.

P.20 - The Town of Atlantic Beach will oppose the construction of any nuclear power plants within Carteret County.

P.21 - The Town of Atlantic Beach will support commercial/recreational fishing and marinas as significant contributors to the local economy.

Implementing Actions - Commercial/Industrial:

I.21 - The Town of Atlantic Beach will enforce its zoning regulations for type and location of commercial land uses (see the future land use map). *Schedule: Continuing Activity.*

I.22 - The Town of Atlantic Beach will review its zoning and subdivision ordinance and revise as necessary to ensure consistency with the policies and implementing actions included in this plan. This review will focus on the following:

- Significant land use compatibility problems;
- Significant water use compatibility identified problems including those in the applicable Division of Environmental Management basinwide plan;
- Significant problems that have resulted from unplanned development and that have implications for future land use, water use, or water quality;
- An identification of areas experiencing or likely to experience changes in predominant land uses;
- Significant water quality conditions and the connection between land use and water quality. *Schedule: Fiscal Year 2007-2008.*

I.23 - The Town of Atlantic Beach will rely on its zoning and subdivision ordinances and the CAMA permitting process to protect AECs. *Schedule: Continuing Activity.*

I.24 - All commercial development efforts will be coordinated with the Town of Atlantic Beach Planning Board. *Schedule: Continuing Activity.*

I.25 - Commercial development will be coordinated with the Town of Atlantic Beach updated shoreline access plan. *Schedule: Continuing Activity.*

I.26 - In guiding commercial development, the Town of Atlantic Beach will support the following locational guidelines:

- Encourage renovation of commercial areas including emphasis on "The Circle" area.

- Encourage location of new commercial/retail uses in vacant commercial buildings.
- Encourage mixed residential/commercial and recreational development. *Schedule: Continuing Activity*.

I.27 - The Town of Atlantic Beach Storm Hazard Mitigation, Post-Disaster Recovery, and Evacuation Plan provides policies for responding to hurricanes or other natural disasters. Those policies address reconstruction needs. The town will allow the reconstruction of any commercial structures demolished by natural disaster when the reconstruction complies with all applicable local, state, and federal regulations. *Schedule: Continuing Activity*.

I.28 - The Town of Atlantic Beach will review and possibly amend its zoning ordinance to reduce/control pollution from commercial development. *Schedule: Fiscal Year 2007-2008*.

I.29 - During its review of proposed commercial development, the Town of Atlantic Beach will consider the following: (1) a preference to have commercial and other intense land uses that generate a substantial amount of traffic and other off-site impacts develop as self-contained areas having minimal ingress and egress to main traffic routes; (2) a preference to have the uses described above located with entrances and exits along streets and roads that are perpendicular to the nearest main traffic route; and (3) a preference to redevelop areas in poor condition. *Schedule: Continuing Activity*.

I.30 - The Town discourages zonings and rezonings that will result in strip development. Strip development is a melange of development, usually commercial, extending along both sides of a major street. Strip development is often a mixture of auto-oriented enterprises (e.g., gas stations, motels, and food stands), and truck-dependent wholesale and light industrial enterprises along with the once-rural homes and farms that await conversion to commercial use. Strip development may severely reduce traffic-carrying capacity of abutting streets by allowing for excessive and conflicting curb cuts. *Schedule: Continuing Activity*.

Policies - Conservation:

P.22 - The Town of Atlantic Beach supports 15A NCAC 7H for the protection of all AECs.

P.23 - The Town of Atlantic Beach supports the regulation of off-road vehicles in the beach/ocean hazard areas.

P.24 - The Town of Atlantic Beach opposes all projects which would block or impair existing navigation channels, increase shoreline erosion in non-ocean hazard areas, private deposition of spoils below mean high tide, cause adverse water circulation patterns, violate water quality standards, or cause degradation of shellfish waters.

P.25 - In the event of a "blow-out," the Town of Atlantic Beach supports inlets being filled or returned to their original condition.

P.26 - The Town of Atlantic Beach supports preservation of its maritime forest areas.

P.27 - The Town of Atlantic Beach opposes the location of floating homes within its jurisdiction. This policy exceeds state requirements.

P.28 - Except for Money Island, the Town of Atlantic Beach opposes the development of sound and estuarine islands. This policy exceeds state requirements.

P.29 - The Town of Atlantic Beach supports the construction of all marinas, docks, and piers which minimize or eliminate adverse effects on coastal wetlands and subaquatic vegetation and comply with 15A NCAC 7H minimum use standards.

P.30 - Except as otherwise permitted in this plan, the Town of Atlantic Beach will not support residential and commercial development in coastal wetlands.

P.31 - The Town of Atlantic Beach will support residential and commercial development which meets 15A NCAC 7H use standards in estuarine shoreline, estuarine water, and public trust areas.

P.32 - The Town of Atlantic Beach will support the preservation and maintenance of its environmentally sensitive areas while promoting tourism and capitalizing on its natural resources. The Town will rely on NCDENR regulations to ensure that development has a minimal impact on environmentally sensitive areas. The Town will continue to employ a local permit officer to enforce these regulations.

P.33 - The Town of Atlantic Beach supports state and federal regulations for the preservation/protection of freshwater (404) and coastal wetlands.

Implementing Actions - Conservation:

I.31 - The Town of Atlantic Beach will review its zoning and subdivision ordinances to ensure compliance with policies P.21 through P.32. *Schedule: Fiscal Year 2007-2008.*

I.32 - The Town of Atlantic Beach will utilize printed materials and public service announcements to educate the public about environmentally sensitive areas and what actions may be taken to support preservation. *Schedule: Continuing Activity*

I.33 - The Town of Atlantic Beach will review all development proposals to ensure the protection of Hoop Hole Creek. *Schedule: Continuing Activity.*

I.34 - The Town of Atlantic Beach will enforce/pursue the following actions to regulate floating homes and both open water and upland marina development:

(1) Atlantic Beach considers boating activities an extremely important part of its tourist industry and overall economy. Subject to the policies stated herein and the town's zoning ordinance, the town does not oppose the construction of both open water and upland marinas. *Schedule: Continuing Activity.*

(2) The Town of Atlantic Beach supports revisions to the zoning ordinance or adoption of a separate ordinance to prohibit floating homes and live-aboard boats. *Schedule: Fiscal Year 2007-2008.*

(3) The construction of all marinas, docks and piers shall minimize or eliminate adverse effects on coastal wetlands and subaquatic vegetation and comply with 15A NCAC 7H minimum use standards. *Schedule: Continuing Activity.*

(4) Atlantic Beach will allow construction of dry stack storage facilities for boats associated with or independent of marinas. Dry stack storage is generally defined as the storing of multiple boats out of the water and off of the ground. Marinas store boats in the water. All applicable zoning, subdivision, 15A NCAC 7H, or other regulations must be satisfied. Water access to dry stack storage facilities should not disturb shellfishing waters or subaquatic vegetation. *Schedule: Continuing Activity.*

(5) Existing marinas, docks and piers may be reconstructed to their prior size so long as all local ordinances and other applicable policies of this plan are satisfied and met when reconstruction occurs. *Schedule: Continuing Activity.*

I.35 - The Town of Atlantic Beach will protect ocean hazard areas by the following actions:

(1) Atlantic Beach will support only uses within the ocean hazard areas which are allowed by 15A NCAC 7H and are consistent with the town's zoning and land protection ordinances. *Schedule: Continuing Activity.*

(2) Atlantic Beach supports the deposit of dredge spoil by the US Army Corps of Engineers on the beach and relocation as the preferred erosion control measures for ocean hazard areas. *Schedule: Continuing Activity.*

(3) The Town of Atlantic Beach will vigorously enforce Article X of the town's zoning ordinance which establishes stringent requirements for the preservation and protection of sand dunes and vegetation thereon. *Schedule: Continuing Activity.*

(4) The town supports state requirements pertaining to shoreline stabilization in ocean hazard areas. *Schedule: Continuing Activity.*

(5) Atlantic Beach will support the limited adjustment of the CAMA setback line in association with ongoing deposit of sand from dredge spoil projects and the establishment of new permanent dune and vegetation lines. However, it is understood that this action will not impact permit decisions regarding CAMA setback line in ocean hazard areas unless the Coastal Resources Commission modifies the State use standards for this AEC. *Schedule: Continuing Activity.*

I.36 - Except in ocean hazard areas, the Town of Atlantic Beach will not oppose bulkhead construction within its jurisdiction as long as construction fulfills the use standards set forth in 15A NCAC 7H and the town zoning ordinance. The town is opposed to all bulkhead construction in ocean hazard areas. *Schedule: Continuing Activity.*

I.37 - Atlantic Beach recognizes the uncertainties associated with sea level rise. Although the rate of rise is difficult to predict, the town will support the following actions:

(1) The Town of Atlantic Beach will cooperate with county, state, and federal efforts to inform the public of the anticipated effects of sea level rise. *Schedule: Continuing Activity.*

(2) The Town of Atlantic Beach will continuously monitor available information on sea level rise and revise as necessary all local building and land use related ordinances to establish setback standards, long-term land use plans, density controls, buffer vegetation protection requirements, and building designs which will facilitate the movement of structures. *Schedule: Continuing Activity.*

(3) Atlantic Beach will allow the construction of bulkheads which satisfy 15A NCAC 7H in all areas, except ocean hazard areas, to protect structures and property from rising sea level. *Schedule: Continuing Activity.*

I.38 - The Town of Atlantic Beach will implement the following to protect maritime forests:

(1) The Town of Atlantic Beach will require large lot sizes in maritime forest areas and limit the amount of clearing of vegetation to only as much as necessary to site a home and provide access. This will be supported by the town's zoning and subdivision ordinance. *Schedule: Continuing Activity.*

(2) The Town of Atlantic Beach will enforce Article VIII of the town's zoning ordinance which establishes stringent requirements for lot clearing. *Schedule: Continuing Activity.*

(3) The Town of Atlantic Beach will review and strengthen its dune protection ordinance. *Schedule: Fiscal Year 2008-2009.*

Policies - Stormwater Control:

P.34 - The Town of Atlantic Beach supports reducing soil erosion, runoff, and sedimentation to minimize adverse effects on surface and subsurface water quality.

P.35 - The Town of Atlantic Beach supports the improvements of surface water quality to protect fragile areas and to provide clean water for recreational purposes.

P.36 - The Town of Atlantic Beach supports the use of "best management practices" to minimize the rapid release of pollutants into coastal water.

P.37 - The Town of Atlantic Beach recognizes comments that were made to the CRC by DWQ regarding coastal stormwater rules. DWQ concluded that its current coastal stormwater rules have not been adequately effective towards addressing water quality impacts to public trust waters. Additionally, DWQ's review of scientific studies resulted in a determination that local governments' simply deferring to state and federal rules to address water quality issues still results in impaired local water quality based on the following conclusions:

- Areas with impervious surfaces of 10% or greater can be linked to local stream degradation.
- Biological diversity has been shown to drop when impervious surfaces increase beyond 10-15%.
- Stream stability is affected when impervious surfaces approach 10% in an area.
- Estuaries generally degrade with impervious surfaces of 10% or greater.
- Sensitive fish species loss increases after about 12% impervious surface.

Therefore, the Town of Atlantic Beach supports reducing impervious surface areas for existing and proposed developments.

Implementing Actions - Stormwater Control:

I.39 - The Town of Atlantic Beach will adopt a local stormwater control ordinance. The ordinance will support the following basic phases:

(1) Site Planning and Design Development Phase,
(2) Assessment Phase,
(3) Control Selection/Design Phase,
(4) Certification/Verification/Approval Phase,
(5) Implementation/Construction Phase,
(6) Final Stabilization/Termination Phase.
(7) Incorporation of the following EPA objectives:
    - Public Education and Outreach on Stormwater Impacts.

- Public Involvement and Participation.
- Elicit Discharge Detection and Elimination.
- Construction Site and Stormwater Runoff Control.
- Post-Construction Stormwater Management, and New Development or Redevelopment.
- Pollution Prevention and Good Housekeeping for Municipal Operations.

Schedule: Fiscal Year 2008-2009.

I.40 - The stormwater control ordinance will require xeriscaping (native vegetation) in estuarine shoreline areas. *Schedule: Continuing Activity.*

I.41 - The Town of Atlantic Beach will support existing state regulations relating to stormwater runoff resulting from development (Stormwater Disposal Policy 15 NCAC 2H.001-.1003) through enforcement of the town's subdivision ordinance. *Schedule: Continuing Activity.*

I.42 - The Town of Atlantic Beach will cooperate with the NCDOT, the North Carolina Division of Water Quality, and other state agencies in mitigating the impact of stormwater runoff on all conservation classified areas. The town will support the Division of Water Quality stormwater runoff retention permitting process through its zoning permit system by verifying compliance prior to issuance of a zoning permit. *Schedule: Continuing Activity.*

I.43 - The Town of Atlantic Beach will attempt to apply for grant funds, and utilize Powell Bill funds, to improve stormwater drainage systems associated with existing rights-of-way. *Schedule: Continuing Activity.*

I.44 - The Town of Atlantic Beach will support existing state regulations relating to stormwater runoff resulting from development (Stormwater Disposal Policy 15 NCAC 2H.001-.1003) through enforcement of the town's subdivision ordinance. *Schedule: Continuing Activity.*

I.45 - The Town of Atlantic Beach will emphasize elimination of stormwater drainage problems for those areas delineated on Map 18 of the CAMA Core Land Use Plan. *Schedule: Continuing Activity.*

I.46 - The Town of Atlantic Beach will support the State of North Carolina shoreline buffer rules in the review and approval of all development proposals. *Schedule: Continuing Activity.*

e. Infrastructure Carrying Capacity

Management Goal: The Town of Atlantic Beach supports the construction of adequate infrastructure systems throughout the town including water, sewer, and transportation systems.

Planning Objective: The Town of Atlantic Beach's planning objective is to support infrastructure systems which are compatible with the town's environmentally sensitive areas including AECs and fragile areas.

Land Use Plan Requirements: The Town of Atlantic Beach's infrastructure carrying capacity policies and implementing actions are intended to provide for the town's peak population. The following provides the policies/implementing actions for infrastructure carrying capacity.

Policies:

P.38 - The Town of Atlantic Beach supports efforts to determine if the provision of central sewer service (collection and treatment) throughout the town is the proper method of wastewater treatment for the town. For the purposes of this plan, service areas will encompass the Town's entire corporate limits.

P.39 - The Town of Atlantic Beach supports maintenance of its central water supply system including wells and storage tanks.

P.40 - The Town of Atlantic Beach supports transportation projects which will improve the efficiency of its transportation system including pedestrian and bicycle access safety.

Implementing Actions:

I.47 - The Town of Atlantic Beach will pursue all available state and federal funding to continue the study of viable options for the establishment of economically feasible/environmentally acceptable central sewer service. *Schedule: Continuing Activity.*

I.48 - The Town of Atlantic Beach supports the construction of package treatment plants that are approved and permitted by the State Division of Environmental Management and by the Carteret County Health Department/Division of Health Services. If any package plants are approved, Atlantic Beach supports the requirement of a specific contingency plan specifying how ongoing private operation and maintenance of the plant will be provided, and detailing provisions

for public assumption of the plant should the private operation fail. Additionally, it is the town's policy that existing package treatment plants continue to operate but must be tied into the municipal sewage treatment system upon its completion. The town will revise its zoning and subdivision ordinances to require that, as part of the development approval process, ongoing operational plans be provided and provisions for incorporation of package treatment plants into a central sewer system be specifically approved. *Schedule: Continuing Activity and revise zoning and subdivision ordinances Fiscal Year 2007-2008.*

I.49 - The Town of Atlantic Beach will promote water saving devices and incorporate appropriate modifications to its existing water rate structure. *Schedule: Fiscal Year 2008-2009.*

I.50 - Atlantic Beach will conserve its surficial groundwater resources by supporting CAMA and NC Division of Environmental Management stormwater runoff regulations, and by coordinating local development activities involving chemical storage or underground storage tank installation/abandonment with Carteret County Emergency Management personnel and the Groundwater Section of the NC Division of Environmental Management. *Schedule: Continuing Activity.*

I.51 - Atlantic Beach will encourage and support water conservation efforts. This will include limiting the maximum output of each town well to a rate which will ensure that the town's water conservation policies will be met. Motels and rental units will be requested to post notices encouraging water conservation by tourists. *Schedule: Continuing Activity.*

I.52 - The Town of Atlantic Beach will support efforts by Carteret County to ensure that aquifer recharge areas are adequately protected. *Schedule: Continuing Activity.*

I.53 - The Town of Atlantic Beach recognizes the potential for well contamination from salt water intrusion due to over pumping of individual wells. The town will continuously investigate measures which may be taken to avoid such consequences. Atlantic Beach will support state and federal groundwater research, monitoring, and management programs. *Schedule: Continuing Activity.*

I.54 - The Town of Atlantic Beach will pursue NC Department of Transportation Bicycle and Pedestrian Planning Grant Funds to develop a comprehensive pedestrian/bicycle plan. *Schedule: Fiscal Year 2009-2010.*

I.55 - The Town of Atlantic Beach will support the transportation improvements identified in Section VI, Plan for the Future - A.5., Transportation, page 155 of the CAMA Core Land Use Plan. *Schedule: Continuing Activity.*

I.56 - The Town of Atlantic Beach will review its zoning and subdivision ordinances to ensure support of mixed use development which will aid in reducing adverse impacts from traffic. *Schedule: Continuing Activity.*

I.57 - The Town of Atlantic Beach will support the development of a third bridge from the mainland to Bogue Banks, initially called for to connect the Salter Path/Indian Beach area to the mainland and included in the 1993-1999 NCDOT Transportation Improvement Plan (TIP). *Schedule: Continuing Activity.*

I.58 - The Town of Atlantic Beach will consider studying the feasibility and cost-effectiveness of seasonal trolley service, water taxi service, pedestrian improvements, and/or other methods of transportation system improvement that do not involve significant investments in new roadway infrastructure as a method of reducing the increase in seasonal traffic loads. *Schedule: Continuing Activity.*

I.59 - The Town will ensure that zoning regulations are made in accordance with the Atlantic Beach Land Use Plan and designed to lessen congestion in the streets; to secure safety from fire, panic, and other dangers; to promote health and the general welfare; to provide adequate light and air; to prevent the overcrowding of land; to avoid undue concentration of population; and to facilitate the adequate provision of transportation, water, sewerage, schools, parks and other public requirements. The regulations shall be made with reasonable consideration, among other things, as to the character of the district and its peculiar suitability for particular uses, and with a view to conserving the value of buildings and encouraging the most appropriate use of land in Atlantic Beach's planning jurisdiction. *Schedule: Continuing Activity.*

f. Natural Hazard Areas

Management Goal: The Town of Atlantic Beach will conserve and maintain its barrier dunes, beaches, floodplains, storm surge areas, coastal wetlands, estuarine shorelines, and other coastal features (refer to 15A NCAC 7H) for their natural protection features. Refer to the Conservation policies and implementing actions on pages 24 to 28.

Planning Objective: The Town of Atlantic Beach will acknowledge and protect all natural hazard areas in its review and approval of proposals for development, including redevelopment activities.

Land Use Plan Requirements: The Town of Atlantic Beach recognizes that the protection of its natural hazard areas is essential to the community's public health, safety, welfare, and economic stability. The following are Atlantic Beach's policies/implementing actions for natural hazard areas.

Policies:

P.41 - The Town of Atlantic Beach supports the protection of its natural hazard areas which are defined in this plan and by 15A NCAC 7H. Please refer to the Conservation policies on page 24.

P.42 - Atlantic Beach supports the relocation of structures endangered by erosion, if the relocated structure will be in compliance with all applicable Federal, State, and local policies and regulations.

P.43 - The Town of Atlantic Beach supports its hazard mitigation plan which was adopted in January 2005. The goals and mitigation implementation measures that were developed as part of the plan are included as Appendix III to the CAMA Core Land Use Plan. The land use plan and the hazard mitigation plan should be consistent with one another. Should they ever be inconsistent, the land use plan will take precedence.

P.44 - The Town of Atlantic Beach supports beach renourishment efforts at least once every eight to ten years. NOTE: Implementation of this policy is essential for the following reasons, including protection of natural hazard areas:

- Protection from land loss, due to erosion.
- Elimination of the need for hardened/engineered erosion protection structures, such as jetties and seawalls.
- Increased public safety, due to protection of private property and roads needed for use by emergency services in a storm/disaster event.
- Recreational benefits, due to increased shoreline availability.
- Increased business and tax revenues due to attractiveness and availability of beachfront.
- Enhanced property values.
- Increased property tax revenues.
- Job creation.
- Improvement of habitat for sea turtles, shore birds, and shoreline vegetation, if projects are properly designed.
- Aesthetic benefits.

P.45 - The Town of Atlantic Beach supports programs designed to foster development and building practices that will minimize flood damage from storms and erosion.

P.46 - The Town of Atlantic Beach acknowledges and endorses the 404 wetlands permit process as defined by the Corp of Engineers' 1987 Manual for Wetlands Identification.

Implementing Actions:

I.60 - The Town of Atlantic Beach will permit the redevelopment of developed areas provided all applicable policies, regulations, and ordinances are complied with. All redevelopment should be designed to withstand natural hazards. *Schedule: Continuing Activity.*

I.61 - Atlantic Beach will continue to enforce its existing zoning and flood damage prevention ordinances and follow the storm hazard mitigation plan. *Schedule: Continuing Activity.*

I.62 - The Town of Atlantic Beach will support and implement the community rating system which allows for reduced flood insurance rates. *Schedule: Continuing Activity.*

I.63 - The Town of Atlantic Beach will utilize the future land use map and its zoning ordinance to control development. The land use map and any zoning changes will be coordinated with the land suitability map. *Schedule: Continuing Activity.*

I.64 - The Town of Atlantic Beach will continue to enforce its dune protection ordinance and revise the ordinance when necessary to ensure continued effectiveness. *Schedule: Continuing Activity.*

I.65 - To regulate development in natural hazard areas, the Town of Atlantic Beach will support the densities indicated on the future land use map. *Schedule: Continuing Activity.*

I.66 - The Town of Atlantic Beach will continue to enforce its Beach and Shoreline Regulations and update them as necessary to ensure their continued effectiveness. *Schedule: Continuing Activity.*

I.67 - The Town of Atlantic Beach will support the implementing actions for sea level rise contained in I.37, page 28. *Schedule: Continuing Activity.*

g. Water Quality

Management Goal: In keeping with the Town of Atlantic Beach vision statement (see page 2), the town will protect its environmental assets to preserve sound and ocean water quality. This includes consideration of the waters in all coastal wetlands, estuarine waters, and both natural and man-made drainage corridors.

Planning Objective: The Town of Atlantic Beach's water quality planning objective is to adopt/enforce implementing actions which will support the White Oak River Basin water quality management plan and to maintain water quality and improve/eliminate impaired waters.

Land Use Plan Requirements: The following policies/implementing actions are intended to control nonpoint discharges and to protect shellfishing waters. The reader should refer to I.15, floor area ratio requirements, page 21; the conservation policies/implementing actions, page 24; and the stormwater policies/implementing actions, page 28.

Policies:

P.47 - The Town of Atlantic Beach supports the goals of the White Oak River Basin Water Quality Management Plan.

P.48 - The Town of Atlantic Beach will oppose all aquaculture activities which will have a negative impact on water quality.

P.49 - The Town of Atlantic Beach supports the guidelines of the Coastal Area Management Act and the efforts and programs of the NC Department of Environment and Natural Resources, Division of Coastal Management and the Coastal Resources Commission to protect/preserve the coastal wetlands, estuarine waters, estuarine shorelines, 404 wetlands, and public trust waters of the Town.

P.50 - The Town of Atlantic Beach supports commercial and recreational fishing and will cooperate with other local governments and state and federal agencies to control pollution to improve water quality so that commercial and recreational fishing will increase.

P.51 - The Town of Atlantic Beach recognizes the value of water quality maintenance to the protection of fragile areas and supports the control of stormwater runoff to aid in the preservation of water quality. The Town will support existing state regulations relating to stormwater runoff resulting from development (Stormwater Disposal Policy 15 NCAC 2H.001-.1003 and CAMA rule 15A NCAC 7H.0205-.2008). The Town also supports development of more stringent

impervious surface requirements based on comments presented by DWQ to the CRC (see policy P.37, page 29).

P.52 - The Town of Atlantic Beach supports the policy that all public and private projects will be designed to limit stormwater runoff into coastal waters and areas of environmental concern.

P.53 - The Town of Atlantic Beach supports the following actions by the General Assembly and the Governor:

- Sufficient state funding should be appropriated to initiate a program of incentives grants to address pollution of our rivers from both point sources and nonpoint sources.

- An ongoing source of state funding should be developed to provide continuous support for an incentives grant program.

- The decision-making process for the award of incentives grants should involve river basin organizations representing local governments and other interest groups in the review of all applications for state funding.

- The ongoing effort of the Department of Environment and Natural Resources to develop administrative rules implementing the White Oak River Basin Management Strategy should continue to involve local government officials in the development, review, and refinement of the proposal.

Implementing Actions:

I.68 - The Town of Atlantic Beach will require the preparation/approval of a water quality control statement for all proposed developments. The statement will specifically define how the following will be addressed:

- Use watershed-based land use planning.
- Protect sensitive natural areas, including coastal wetlands.
- Establish buffer network.
- Minimize impervious cover in site design.
- Limit erosion during construction.
- Maintain coastal growth measures.
- Restoration of impaired waters.

- Management of the cause and sources of pollution to ensure the protection of those waters currently supporting their uses allowing for reasonable economic growth.
- Reduction of nutrients in Atlantic Beach waters.
- Reduction of bacterial contamination sources to all waters.

This implementing action requirement will be addressed in the update of the Town's zoning and subdivision ordinances (I.31, page 26) and in the adoption of a stormwater control ordinance (I.39, page 29). *Schedule: Fiscal Year 2007-2008 and Fiscal Year 2008-2009).*

I.69 - The Town of Atlantic Beach will revise its zoning ordinance to regulate aquaculture activities. *Schedule: Fiscal Year 2007-2008.*

I.70 - The Town of Atlantic Beach will revise its zoning ordinance to regulate mooring. *Schedule: Fiscal Year 2007-2008.*

I.71 - The Town of Atlantic Beach will review and amend the local zoning ordinance with regard to underground chemical and gasoline storage regulations to ensure a minimum of risk to local groundwater resources. *Schedule: Fiscal Year 2007-2008.*

I.72 - The Town of Atlantic Beach will continuously enforce, through the development and zoning permit process, all current regulations of the NC State Building Code and NC Division of Health Services relating to building construction and septic tank installation/replacement in areas with soils restrictions. *Schedule: Continuing Activity.*

I.73 - Through its public awareness program (see I.32, page 26 and I.51, page 32) and preparation of a stormwater control ordinance (see I.39, page 29), the Town of Atlantic Beach will support the following water quality and water conservation related actions:

- Avoid planting turf in areas that are hard to water such as steep inclines and isolated strips along sidewalks and driveways.
- Use the garbage disposal sparingly. Compost instead and save gallons every time.
- Plant during the spring and fall when the watering requirements are lower.
- Use a layer of organic mulch around plants to reduce evaporation and save hundreds of gallons of water a year.

- Divide your watering cycle into shorter periods to reduce runoff and allow for better absorption every time you water.
- Only water your lawn when needed. You can tell this by simply walking across your lawn. If you leave footprints, it is time to water.
- Adjust your lawn mower to a higher setting. Longer grass shades root systems and holds soil moisture better than a closely clipped lawn.
- Use porous materials for walkways and patios to keep water in your yard and prevent wasteful runoff.
- Direct downspouts and other runoff towards shrubs and trees, or collect and use for your garden.
- Water your summer lawns once every three days and your winter lawn once every five days.
- Reduce the amount of grass in your yard by planting shrubs, and ground cover with rock and granite mulching.
- Don't water your lawn on windy days. After all, sidewalks and driveways don't need water.
- When watering grass on steep slopes, use a soaker hose to prevent wasteful runoff.
- While fertilizers promote plant growth, they also increase water consumption. Apply the minimum amount of fertilizer needed.
- Next time you add or replace a flower or shrub, choose a low water use plant for year-round landscape color and save up to 550 gallons each year.
- Landscape with Xeriscape trees, plants and groundcovers. Call your local conservation office for more information about these water thrifty plants.
- Water only as rapidly as the soil can absorb the water.
- Aerate your lawn. Punch holes in your lawn about six inches apart so water will reach the roots rather than run off the surface.

Schedule: Continuing Activity and implementing action I.39, page 29.

I.74 - The Town will consider revising its zoning ordinance to provide for parking requirements for compact cards in larger developments (developments with 25 or more spaces). *Schedule: Fiscal Year 2007-2008.*

h. Local Areas of Concern

Management Goal: The Town of Atlantic Beach supports local concern policies/ implementing actions which will strengthen the Town's planning program and respond to the overall goals of CAMA.

Planning Objective: The planning objective is to address local concern policies and implementing actions which may not be specifically addressed in the CAMA Land Use Plan guidelines.

Land Use Plan Requirements: The following policies/implementing actions focus on areas of local concern to specifically address cultural, historical, and scenic areas; economic development; general health and human services needs; redevelopment; and funding options.

Policies - Cultural, Historical, and Scenic Areas:

P.54 - The Town of Atlantic Beach does not have any nationally significant historic sites within its jurisdiction, but it will strive to protect any discovered sites.

P.55 - The Town of Atlantic Beach will support preservation of the cultural significance of "The Circle" area.

P.56 - The Town of Atlantic Beach will support preservation /protection of the Fort Macon State Park.

P.57 - The Town of Atlantic Beach will support preservation/protection of the estuarine, inlet, and ocean shoreline areas as valuable scenic assets.

P.58 - The Town of Atlantic Beach supports the North Carolina Aquarium in Pine Knoll Shores in their efforts to provide a regional and cultural destination.

Implementing Actions - Cultural, Historical, and Scenic Areas:

I.75 - The Town of Atlantic Beach will emphasize the protection of scenic areas in the update of its 1999 Public Access - Preliminary Recreation Assessment (see I.1). *Schedule: Fiscal Year 2008-2009.*

I.76 - The Town of Atlantic Beach will guide/encourage development and redevelopment to protect any historic properties identified within the Town. *Schedule: Continuing Activity.*

I.77 - The Town of Atlantic Beach will coordinate all Town public works projects with the NC Division of Archives and History to ensure the identification and preservation of significant archaeological sites. *Schedule: Continuing Activity.*

Policies - Economic Development:

P.59 - The Town of Atlantic Beach supports the economic development efforts of the Carteret County Tourism Development Authority.

P.60 - The Town of Atlantic Beach supports redevelopment of "The Circle" area as essential to the Town's economic growth.

P.61 - The Town of Atlantic Beach supports the following development/growth objectives as crucial to effective economic development:

- Supports feasibility studies relating to the development of a central sewer collection and treatment system.
- Protect maritime forest and dunes areas.
- Maintain existing overall average residential density.
- Redevelop deteriorated residential and commercial areas.
- Maintain an adequate water supply.
- Improve traffic flow, especially on NC 58.
- Continuing regular, periodic deposit of dredge spoil projects in conjunction with the Corps of Engineers.

Implementing Actions - Economic Development:

I.78 - The Town of Atlantic Beach will review its zoning and subdivision ordinances and revise, if necessary, to accommodate redevelopment of "The Circle" area. *Schedule: Fiscal Year 2007-2008.*

I.79 - The Town of Atlantic Beach will support the activities of the NC Division of Travel and Tourism. Specifically, the monitoring of tourism-related industry, efforts to promote tourism-related commercial activity, and efforts to enhance and provide shoreline resources. *Schedule: Continuing Activity.*

I.80 - The Town of Atlantic Beach will support mixed-use development through its zoning ordinance. The ordinance will be reviewed and amended, as necessary, to support mixed-use (residential/non-residential) development. *Schedule: Fiscal Year 2007-2008.*

I.81 - The Town of Atlantic Beach is receptive to state and federal programs, particularly those which provide improvements to the Town. The Town will continue to support fully such programs, especially the following: North Carolina Department of Transportation road and bridge improvement programs, environmental protection, tourism, planning, the US Army Corps of Engineers

regulatory and permitting efforts, dredging and channel maintenance by the US Army Corps of Engineers, the North Carolina shoreline access grant program, flood insurance, and federal and state projects which provide efficient and safe boat access for commercial and sport fishing. *Schedule: Continuing Activity*.

I.82 - The Town of Atlantic Beach considers tourism to be the cornerstone of its economy and will implement the following to improve opportunities for tourism:

- The Town will continue to support the activities of the Carteret County Tourism Development Bureau and the North Carolina Division of Travel and Tourism.
- The Town's development priorities and goals of environmental and resource protection clearly state its strong desire to encourage and promote tourism. This policy will be implemented through the network of conservation-related policies contained in this plan.

Schedule: Continuing Activity.

Policies - General Health and Human Service Needs:

P.62 - The Town of Atlantic Beach will support the development of the following community facilities:

- New municipal administration building/police department/fire station complex as circumstances dictate.
- Expansion of the town's water system to include supply wells and storage tanks.
- Stormwater drainage facilities.
- Construction of additional shoreline access facilities.
- State and local transportation facilities, including roads.
- Construction of general use year-round recreational facilities.
- Extension of electrical utilities.

P.63 - The Town of Atlantic Beach will implement its Hazard Mitigation Plan to improve public safety in the event of a natural disaster.

P.64 - The Town of Atlantic Beach supports a comprehensive recreational program to provide a broad range of recreation facilities for its citizens.

P.65 - The Town of Atlantic Beach will support waste recycling efforts.

P.66 - The Town of Atlantic Beach will continue to support a private contract for collection of residential refuge and disposal of solid waste at the Tuscarora regional landfill.

P.67 - The Town of Atlantic Beach supports mutual aid in the form of Fire/EMS service with Carteret County and area municipalities.

Implementing Actions - General Health and Human Services Needs:

I.83 - The Town of Atlantic Beach will prepare a specific capital improvements plan (CIP) with emphasis on services/facilities which will affect growth, development, and human services needs. This will support policies P.61 to P.66. *Schedule: Fiscal Year 2009-2010.*

I.84 - The Town of Atlantic Beach will provide sufficient emergency services to all residents by ensuring the implementation of the following:

(1) Require that all necessary infrastructure firefighting capability/capacity be provided in new developments. *Schedule: Continuing Activity.*

(2) Continue to maintain an effective signage and addressing system for all streets and roads. *Schedule: Continuing Activity.*

I.85 - The Town of Atlantic Beach will appoint a community appearance committee to establish guidelines and procedures for community appearance awards and to address the problem of litter on beaches and along roads. *Schedule: Fiscal Year 2008-2009 and Continuing.*

I.86 - The Town of Atlantic Beach will selectively support state and federal programs related to the Town's general health and human services needs. The Town, through its boards and committees, will monitor state and federal programs and regulations. It will use opportunities as they are presented to voice support for or to disagree with programs and regulations that are proposed by state and federal agencies. *Schedule: Continuing Activity.*

I.87 - The Town of Atlantic Beach will, through its public information efforts, educate people and businesses on waste reduction and recycling. *Schedule: Continuing Activity.*

Policies - Redevelopment:

P.68 - The Town of Atlantic Beach will promote, foster, and encourage the redevelopment of old, poorly designed and underutilized areas. Redevelopment is preferred and deemed more important than development of currently undeveloped areas. Many developed areas are in poor condition with poor road design, lack of vegetation, dilapidated housing, mixed uses, etc.

P.69 - The Town of Atlantic Beach supports redevelopment of "The Circle" area.

Implementing Actions - Redevelopment:

I.88 - The Town of Atlantic Beach will continue a program of strict enforcement of the minimum code as a means to improve the quality of existing development. *Schedule: Continuing Activity.*

I.89 - The Town of Atlantic Beach will take an active supervisory role in all future redevelopment projects. All projects are required to consider the Town's environmental policies and to address the Town's other public needs, especially its needs for a sound street system and for public access to the beaches. *Schedule: Continuing Activity.*

I.90 - The Town of Atlantic Beach will allow the reconstruction of any structures demolished by natural disaster or by other causes in accordance with all applicable federal, state, and local regulations. *Schedule: Continuing Activity.*

I.91 - The Town of Atlantic Beach will consider, on a case-by-case basis, the expenditure of local funds to acquire unbuildable lots in hazardous areas. Donations of such lots will be accepted. *Schedule: Continuing Activity.*

Policies - Funding Options:

P.70 - The Town of Atlantic Beach will selectively support state and federal programs related to the Town. The Town, through its boards and committees, will monitor state and federal programs and regulations. It will use opportunities as they are presented to voice support for or to disagree with programs and regulations that are proposed by state and federal agencies.

Implementing Actions - Funding Options:

I.92 - The Town of Atlantic Beach will continue to support state and federal programs that are deemed necessary, cost-effective, and within the administrative and fiscal capabilities of the Town. These include, but are not necessarily limited to:

(1) Emergency Medical Services
(2) Coastal Area Management Act, including shoreline access funds
(3) Small Business Association
(4) Economic Development Administration Funds
(5) Federal Emergency Management Program
(6) Parks and Recreation Trust Fund
(7) NC Clean Water Management Trust Fund
(8) NC Division of Water Quality Section 319

Schedule: Continuing Activity.